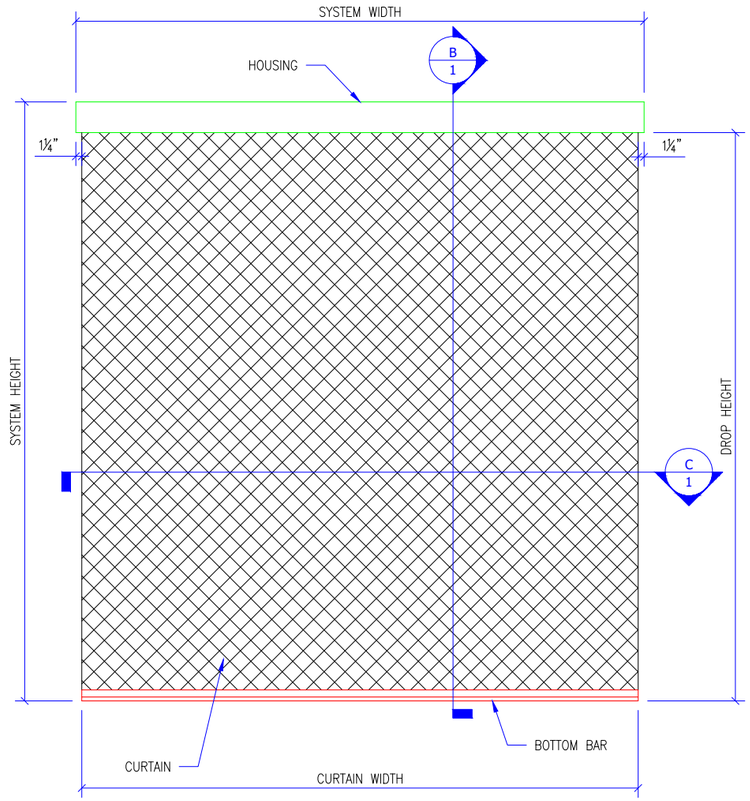

A ELEVATION DETAIL
SCALE: 3/8" = 1'-0"

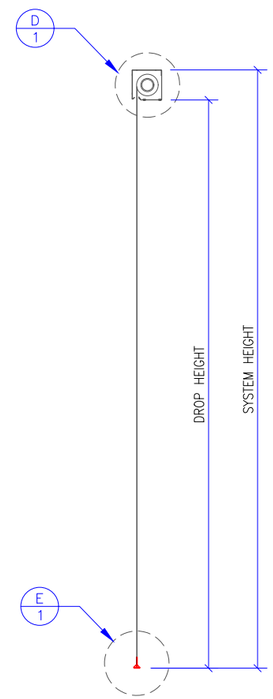

B SECTION DETAIL
SCALE: 3/8" = 1'-0"

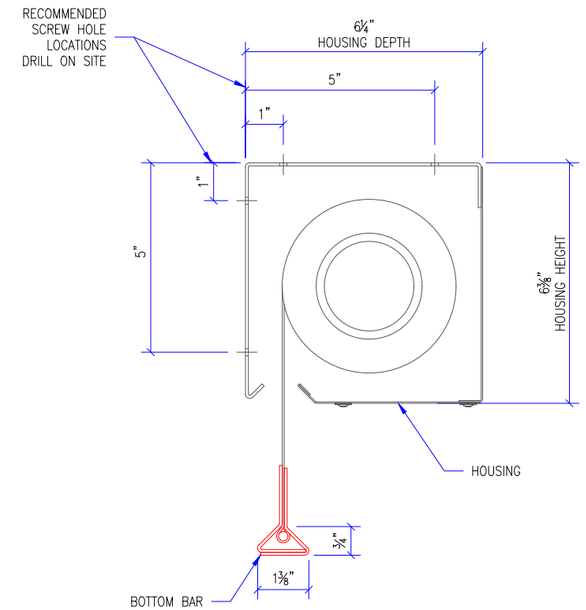

D HOUSING DETAIL
SCALE: 3" = 1'-0"

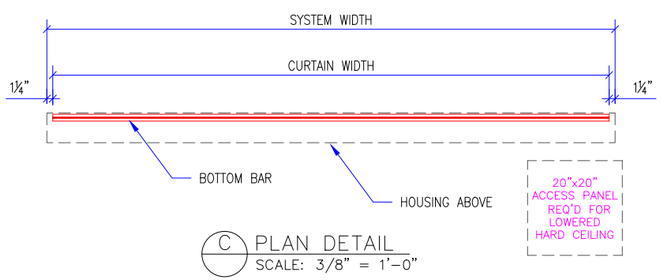

C PLAN DETAIL
SCALE: 3/8" = 1'-0"

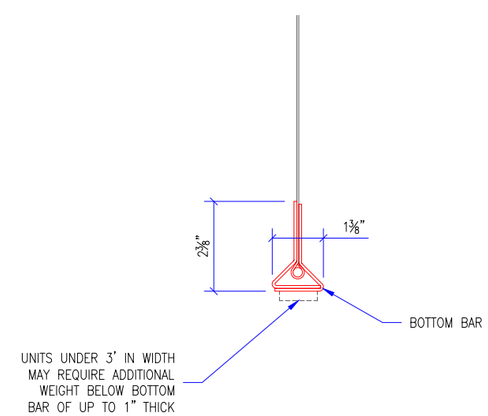

E M2100 BOTTOM BAR
SCALE: 3" = 1'-0"

SMOKE SG GUARD
287 N. Maple Grove
Boise, ID 83704
800.574.0330
www.smokeguard.com

M2100DRAFT NOTES:
1. SMOKE GUARD SMOKE RATED UNITS (HOUSINGS & SIDE GUIDES) TO BE MOUNTED TO A FINISHED, SMOKE RATED ASSEMBLY OR STRUCTURE PER YOUR APPLICATION.
2. CLIENT TO PROVIDE CONTINUOUS MOUNTING SURFACE FOR STRUCTURAL AND SHEET METAL ATTACHMENT.
3. ORDER LENGTHS TO BE AT 1/4" INCREMENTS ONLY.
4. DIMENSIONS TO NOT INCLUDE HEADS OF EXTERNAL FASTENERS.

REVISION

REVISION NUMBER	REVISION DATE	REVISION DESCRIPTION
01	7.27.20	INITIAL RELASE

QUOTE:
CONFIGURATION:
PROJECT:
DIST.:

DESIGN SET: D1
MODEL: M2100D

SIZE B

M2100D ELEVATION PLAN AND SECTION

SHEET 1 OF 2

DRAWN: TM 7.27.2020

PAPER SIZE: 11 X 17

FILE LOCATION:\\OXIDE2\company\Sales_Integration\CAD\Web Design Details\M2100

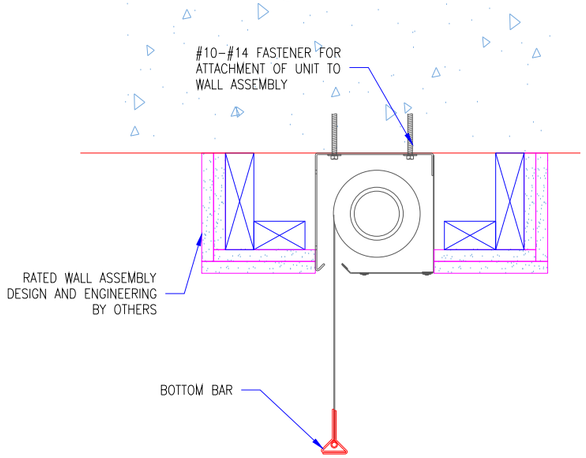

6 TOP MOUNT W/ FLUSH COVER
SCALE: 1 1/2" = 1'-0"
APPROVED FIRE RATED INSTALLATION

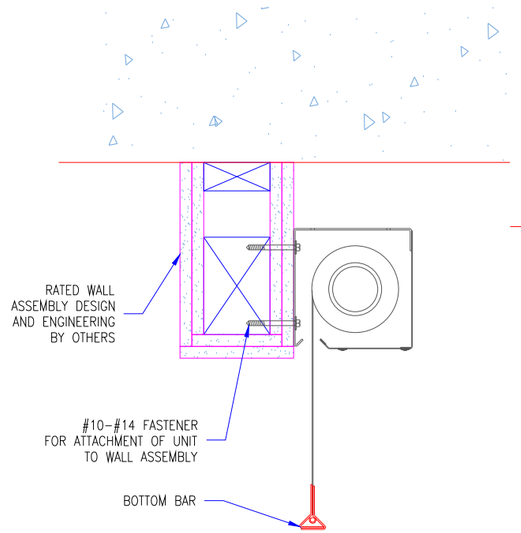

4 HEADBOX FACE MOUNT
SCALE: 1 1/2" = 1'-0"
APPROVED FIRE RATED INSTALLATION

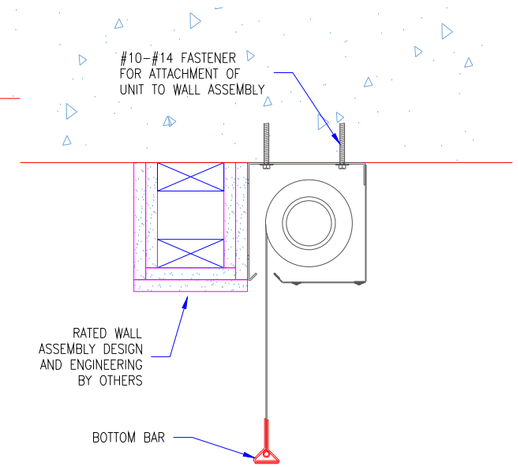

3 HEADBOX TOP MOUNT TO DECK
SCALE: 1 1/2" = 1'-0"
APPROVED FIRE RATED INSTALLATION

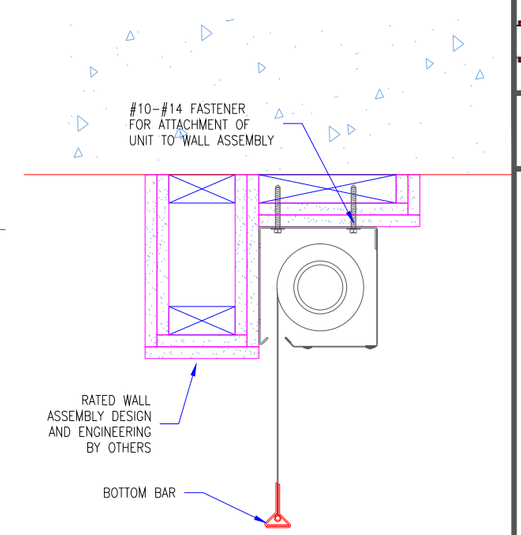

1 HEADBOX AS TESTED TOP MOUNT
SCALE: 1 1/2" = 1'-0"
APPROVED FIRE RATED INSTALLATION

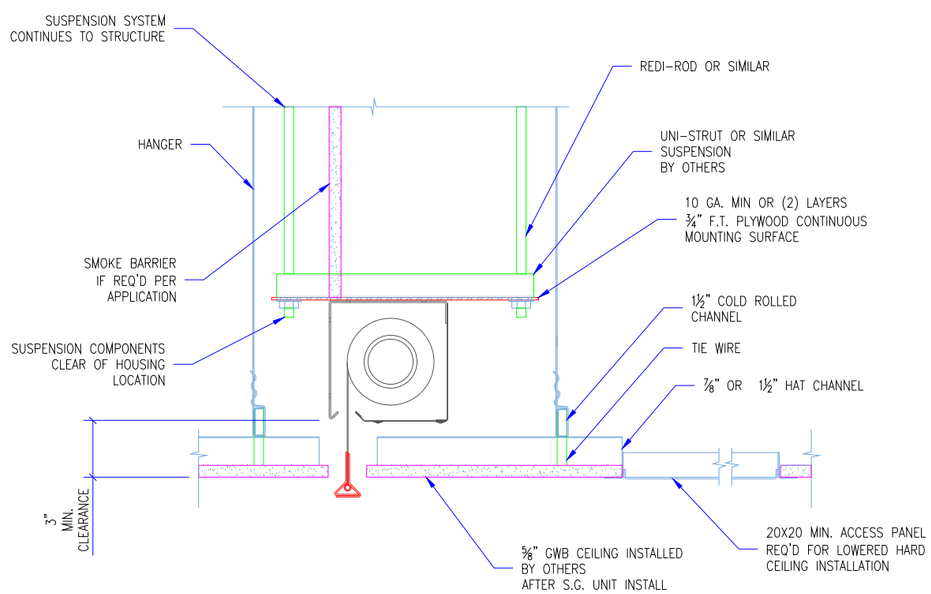

5 HEADBOX DROPPED CEILING
SCALE: 1 1/2" = 1'-0"
SMOKE RATED INSTALLATION

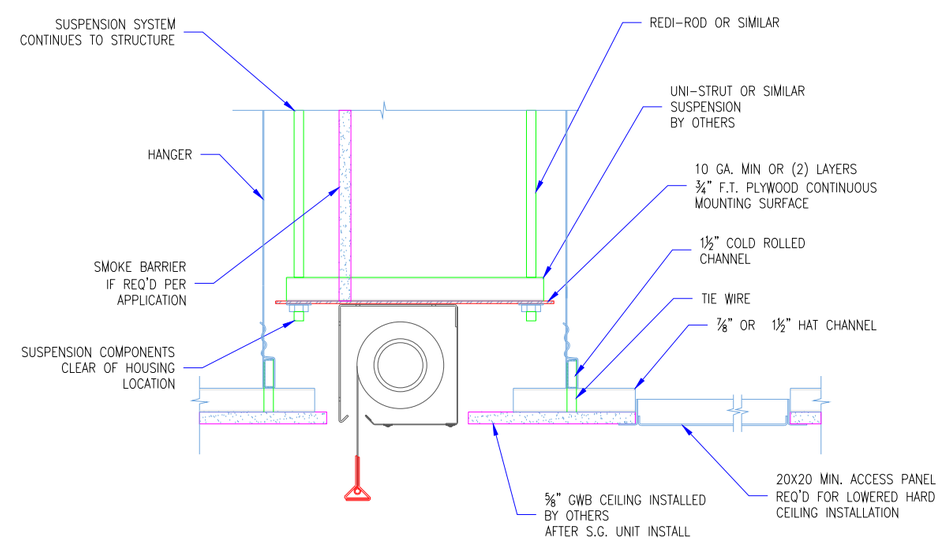

2 HEADBOX DROPPED CEILING
SCALE: 1 1/2" = 1'-0"
SMOKE RATED INSTALLATION

SMOKE SG GUARD
287 N. Maple Grove
Boise, ID 83704
800.574.0330
www.smokeguard.com

M2100DRAFT NOTES:
1. SMOKE GUARD SMOKE RATED UNITS (HOUSINGS & SIDE GUIDES) TO BE MOUNTED TO A FINISHED, SMOKE RATED ASSEMBLY OR STRUCTURE PER YOUR APPLICATION.
2. CLIENT TO PROVIDE CONTINUOUS MOUNTING SURFACE FOR STRUCTURAL AND SHEET METAL ATTACHMENT.
3. ORDER LENGTHS TO BE AT 1/4" INCREMENTS ONLY.
4. DIMENSIONS TO NOT INCLUDE HEADS OF EXTERNAL FASTENERS.

REVISION

REVISION NUMBER	REVISION DATE	REVISION DESCRIPTION
01	7.27.20	INITIAL RELASE

QUOTE:
CONFIGURATION:
PROJECT:
DIST.:

DESIGN SET: D1
MODEL: M2100D

SIZE B

HEAD DETAILS

SHEET 2 OF 2

DRAWN: TM 7.27.2020

PAPER SIZE: 11 X 17

FILE LOCATION:\\OXIDE2\company\Sales_Integration\CAD\Web Design Details\M2100